26

UNIVERSITY OF SWAZILAND
FINAL EXAMINATION PAPER

PROGRAMME: BSC ABE. II

COURSE CODE: ABE203

TITLE OF PAPER: ENGINEERING DRAWING

TIME ALLOWED: TWO (2) HOURS

SPECIAL MATERIAL REQUIRED: DRAWING EQUIPMENT

INSTRUCTIONS: ANSWER QUESTION ONE AND ANY TWO OTHER QUESTIONS.

DO NOT OPEN THIS PAPER UNTIL PERMISSION HAS BEEN GRANTED BY THE CHIEF INVIGILATOR

SECTION I COMPULSORY

QUESTION 1

a) Table 1 shows drawings of different objects and their combinations. Name the lines labelled X in the drawings [8 marks]

	Object drawing	Name of line marked
1	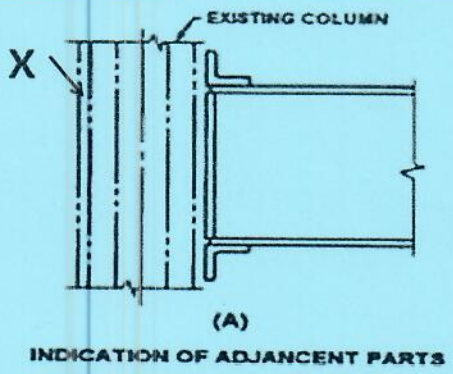	
2	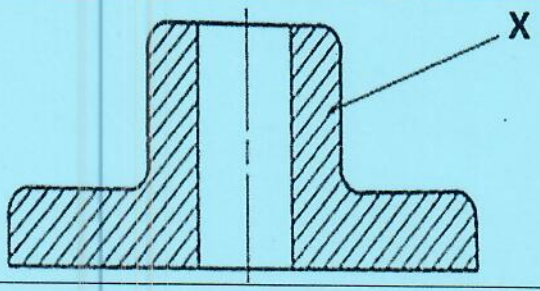	
3	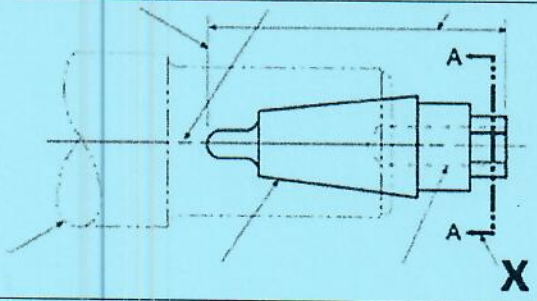	
4	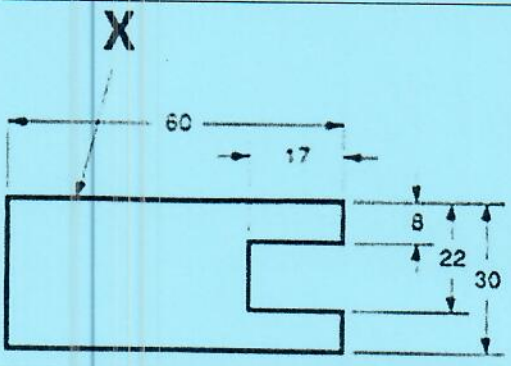	

b) Figure 1 shows an incorrectly dimensioned slide block for a lathe machine.

Dimension the block correctly on the paper provided. [12 marks]

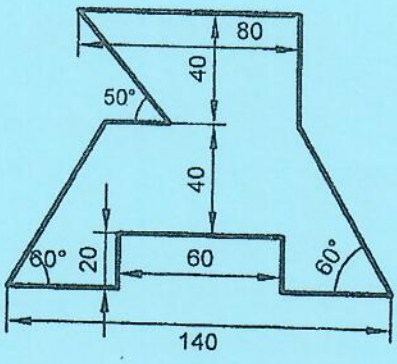

(i) INCORRECT

Figure 1 A slide block whose dimensions are incorrectly placed.

c) An A4 paper size is provided as 210 x 297 mm. Show your calculations to determine the size of A1 paper. [6 marks]

d) Engineering drawing comprises of graphics and word languages. What is communicated in each of the languages? [8 marks]

e) Distinguish between isometric, oblique and orthographic projections. [6 marks]

SECTION IIANSWER ANY TWO QUESTIONS

QUESTION 2

a) Compare and contrast the following output components of a computer hardware that is used for Computer Aided Drafting, CAD.
   i. Printer [3 marks]
   ii. Monitor [3 marks]
   iii. plotter [3 marks]

b) Distinguish between
   i. Absolute and Relative Cartesian Coordinates systems [4 marks]
   ii. Absolute and Relative Polar Coordinate systems [4 marks]

c) Figure 2 shows a plan of the walls of a house shell. Describe how you would create the inner wall A indicated in the figure using only modify commands [13 marks]

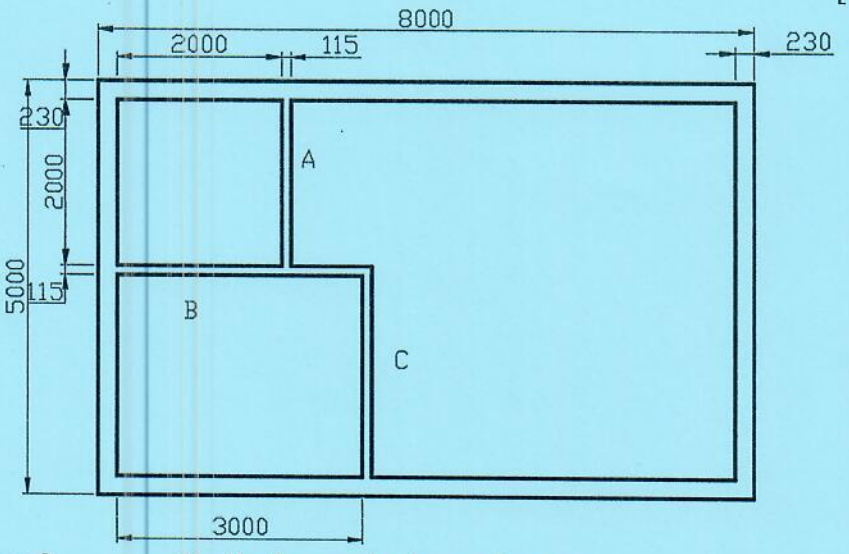

Figure 2 Shell of a one bedroom house

QUESTION 3

a) What are the key objectives of sectioning? [4 marks]

b) Name any five types of sectioning. [10 marks]

c) Figure 3a shows a sectioned view of a flange in three dimensions. The six possible ways of showing the front view of the sectioned flange are shown in Figure 3b.

i. What type of sectioning was performed? [3 marks]
ii. What is the correct front view of the sectioned flange? [3 marks]
iii. What is wrong in each of the other views you have left? [10 marks]

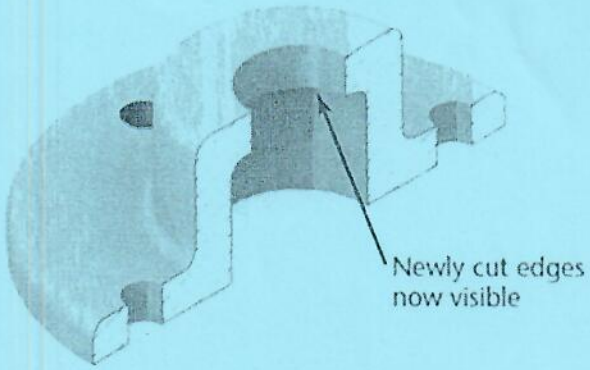

Figure 3a A sectioned flange

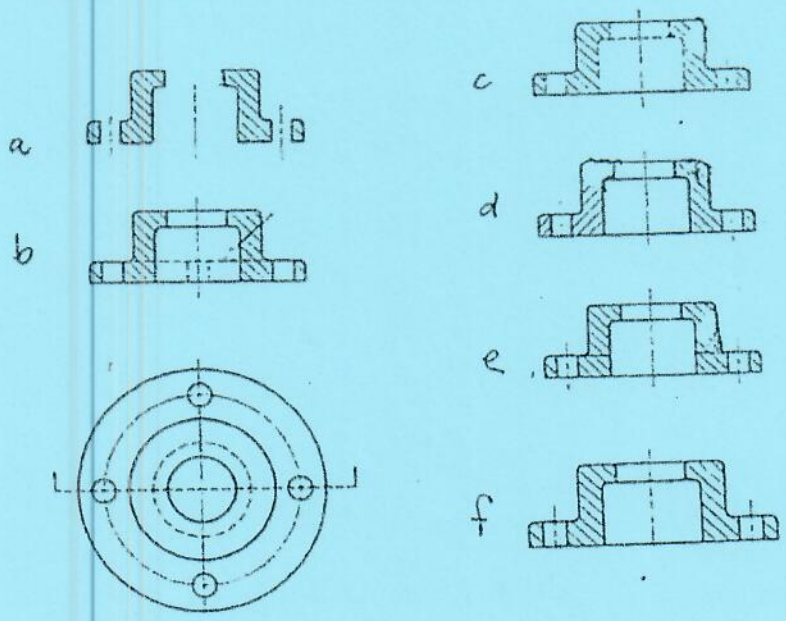

Figure 3b Possible sectional views of the flange

QUESTION 4

a) Use the method of principal planes and quadrants to distinguish between first angle and third angle projection in engineering drawing. [10 marks]

b) Figure 4 show an orthographic projection of a solid. Fill in the missing views and any missing lines [10 marks]

c) What is a primary auxiliary view [4 marks]

d) Name three commonly used primary auxiliary views [6 marks]

QUESTION 1b) **CANDIDATE NUMBER** _____

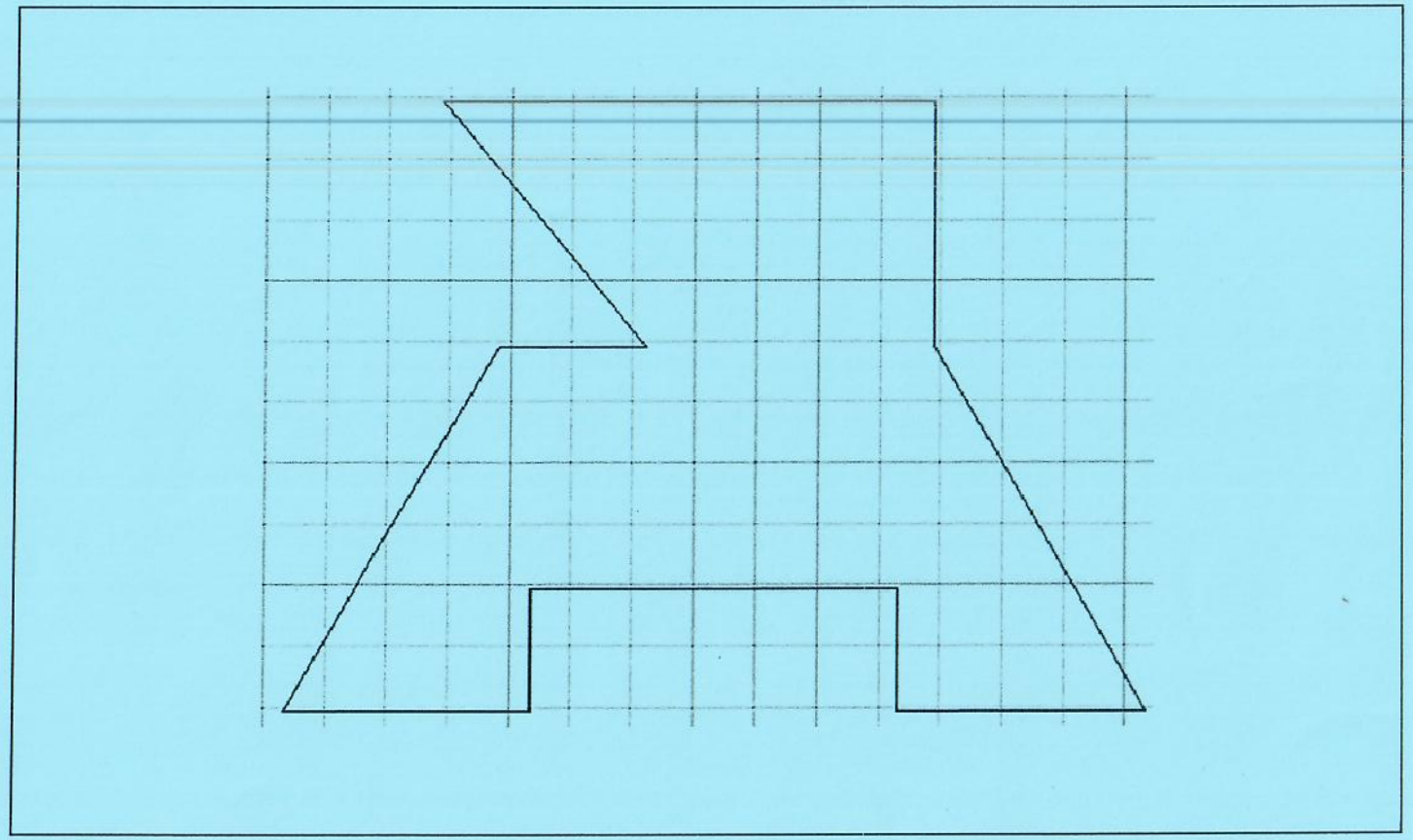

Figure 1 A slide block whose dimensions are incorrectly placed

3

QUESTION 4 b) CANDIDATE NUMBER _____

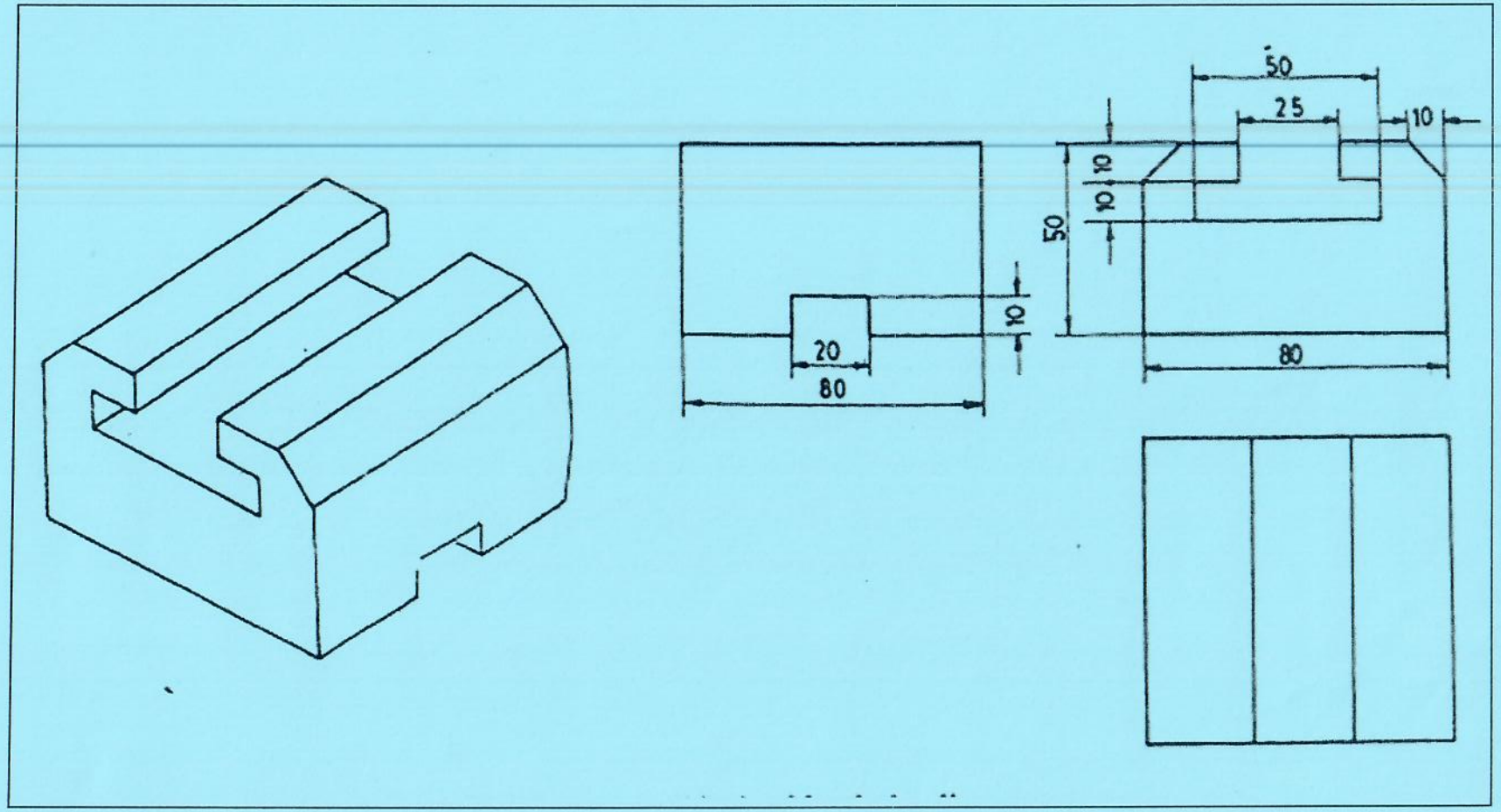

Figure 4 Isometric with missing information in orthographic projection

32